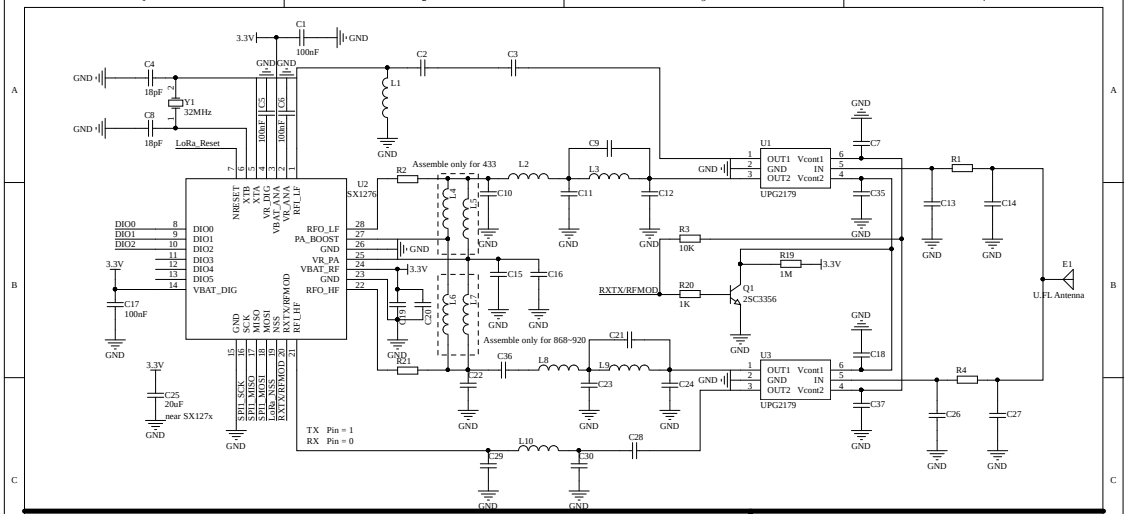

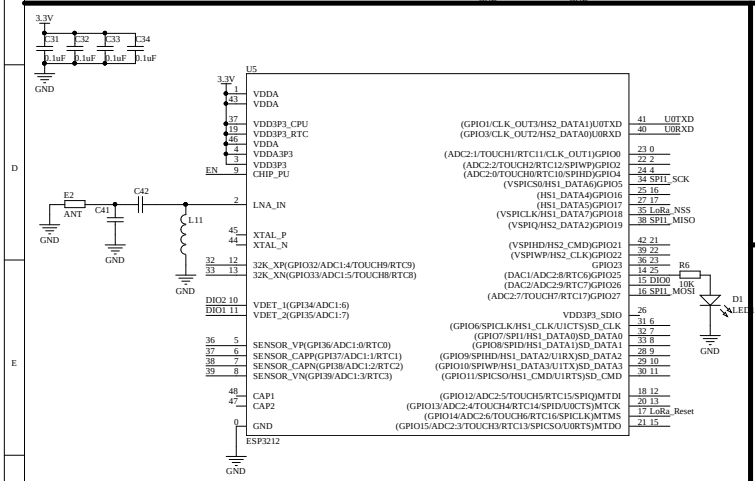

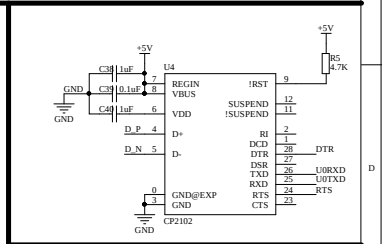

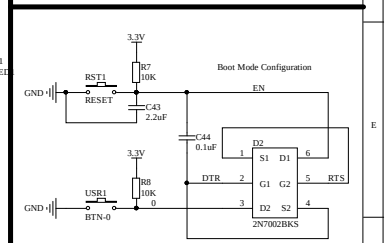

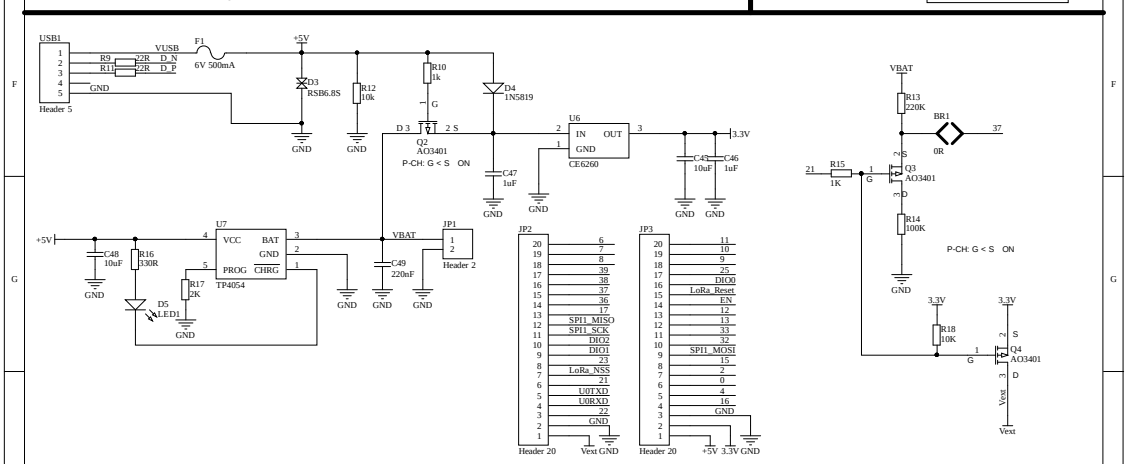

Restricted technical data, please do not disclose without permission !!!

Heltec Automation

Wireless Stick Lite schematic diagram

https://heltec.org