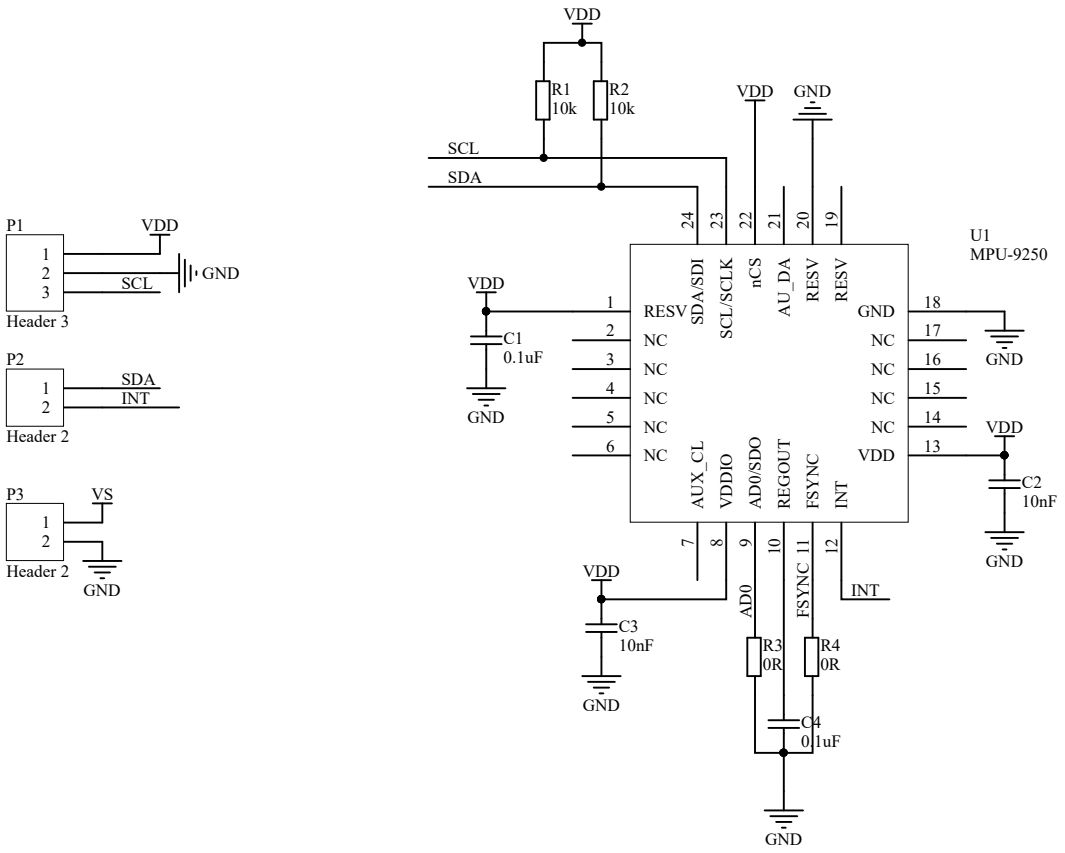

MPU9250

Heltec Automation
https://heltec.org