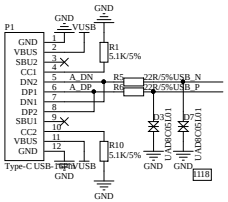

USB

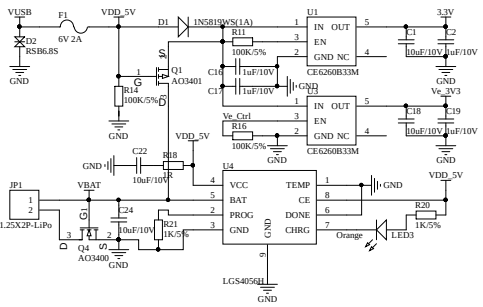

Power circuit

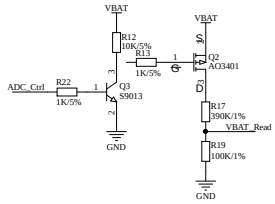

ADC

LED

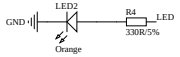

MAIN

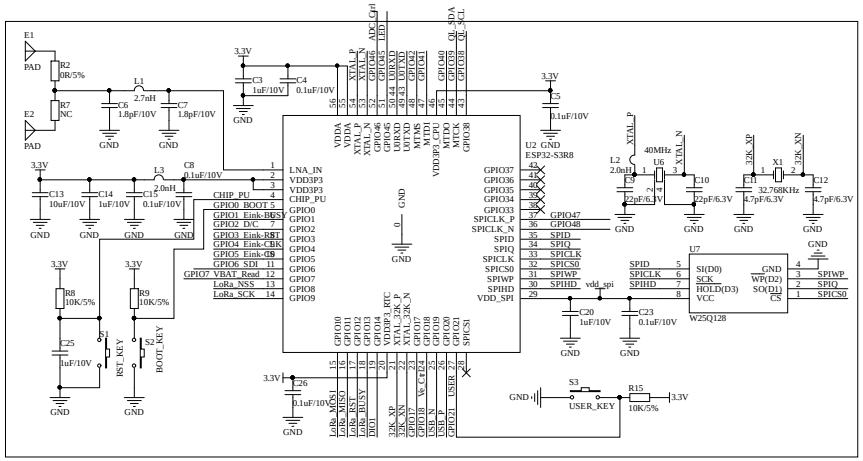

DISPLAY

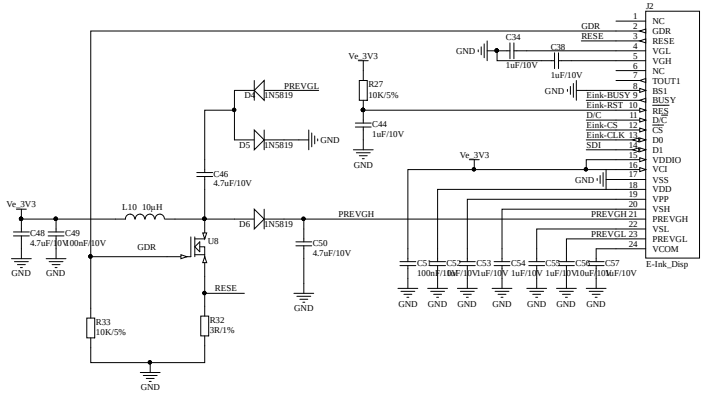

QUICK LINK

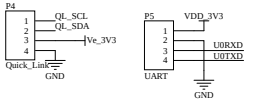

RA62

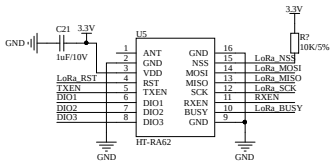

Interface

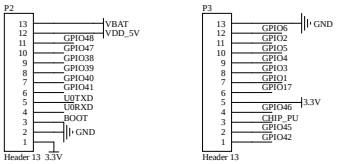

Title		
Size A2	Number	Revision
Date: 2024/7/9	Sheet of	
File: D:\DreamSpark\..\ESP32R8paper213v0.5.SchDoc	Drawn By:	