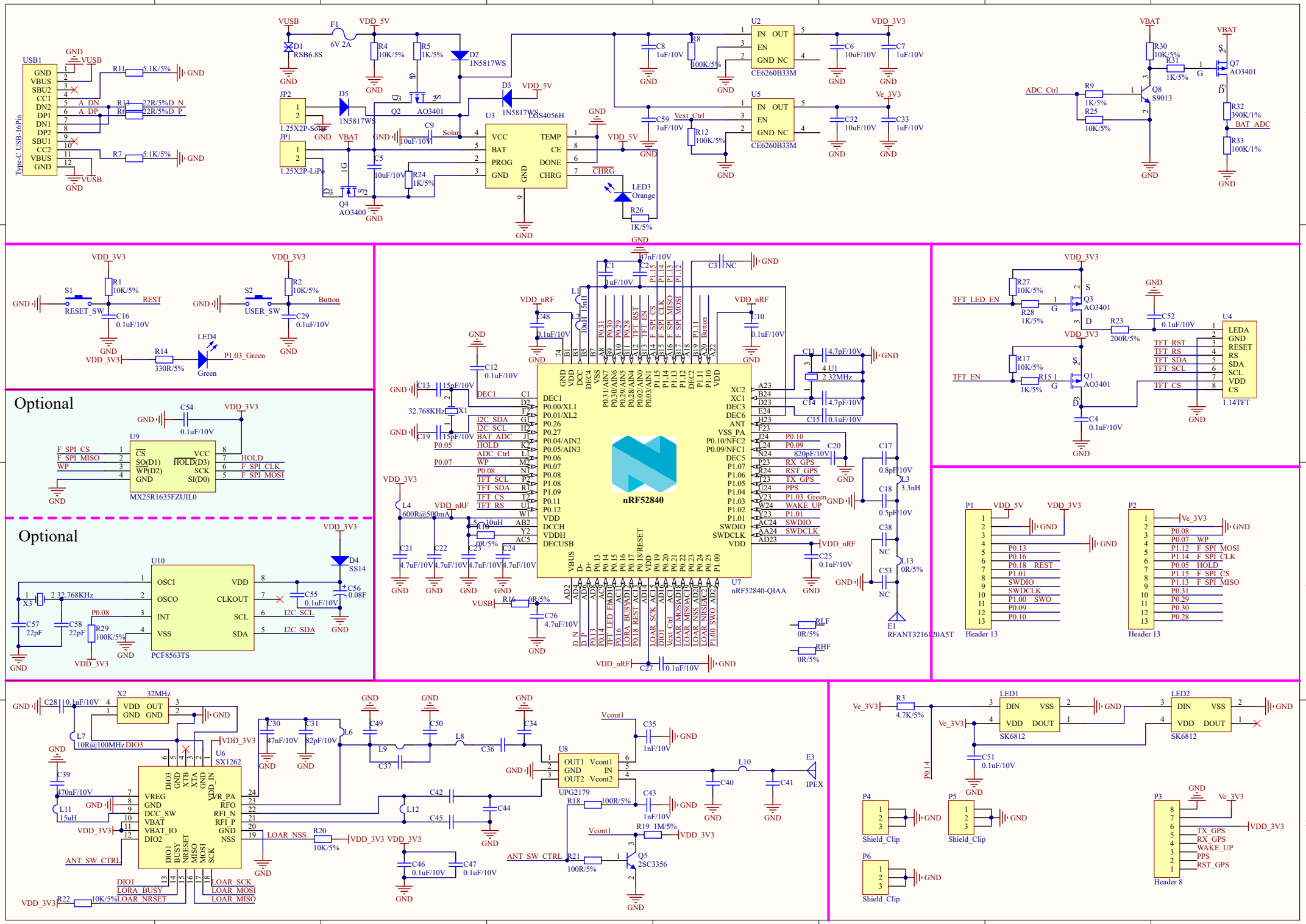
USB1
Type-C USB-16Pin
VUSB
F1
6V 2A
VDD_5V
D1
RSB6.8S
R4
10K/5%
R5
1K/5%
D2
1N5817WS
JP2
1.25X2P-Solar
D5
1N5817WS
JP1
1.25X2P-LiPo
Q2
AO3401
Q4
AO3400
VBAT
C9
10uF/10V
C5
10uF/10V
R24
1K/5%
D3
1N5817WS
U3
LGS4056H
VCC
BAT
PROG
GND
TEMP
CE
DONE
CHRG
CHRG
LED3
Orange
R26
1K/5%
U2
CE6260B33M
IN
OUT
EN
GND
NC
VDD_3V3
C8
1uF/10V
R8
100K/5%
C6
10uF/10V
C7
1uF/10V
U5
CE6260B33M
Ve_3V3
C59
1uF/10V
Vext_Ctrl
R12
100K/5%
C32
10uF/10V
C33
1uF/10V
R11
5.1K/5%
R13
22R/5%
R6
22R/5%
R7
5.1K/5%
A_DN
A_DP
D_N
D_P
ADC_Ctrl
R9
1K/5%
R25
10K/5%
Q8
S9013
R30
10K/5%
R31
1K/5%
Q7
AO3401
R32
390K/1%
R33
100K/1%
BAT_ADC
S1
RESET_SW
REST
C16
0.1uF/10V
R1
10K/5%
S2
USER_SW
Button
C29
0.1uF/10V
R2
10K/5%
LED4
Green
R14
330R/5%
P1.03_Green
Optional
U9
MX25R1635FZUIL0
CS
SO(D1)
WP(D2)
GND
VCC
HOLD(D3)
SCK
SI(D0)
F_SPI_CS
F_SPI_MISO
WP
HOLD
F_SPI_CLK
F_SPI_MOSI
C54
0.1uF/10V
Optional
U10
PCF8563TS
OSCI
OSCO
INT
VSS
VDD
CLKOUT
SCL
SDA
X3
32.768KHz
C57
22pF
C58
22pF
R29
100K/5%
P0.08
I2C_SCL
I2C_SDA
D4
SS14
C55
0.1uF/10V
C56
0.08F
nRF52840
U7
nRF52840-QIAA
VDD_nRF
C1
1uF/10V
C2
47nF/10V
C3
NC
L1
10uH 15nH
L2
10uH 15nH
C48
0.1uF/10V
C10
0.1uF/10V
C12
0.1uF/10V
C13
15pF/10V
C19
15pF/10V
X1
32.768KHz
DEC1
I2C_SDA
I2C_SCL
BAT_ADC
HOLD
ADC_Ctrl
WP
P0.05
P0.07
P0.08
TFT_SCL
TFT_SDA
TFT_CS
TFT_RS
L4
600R@500mA
L5
10uH
R10
0R/5%
C21
4.7uF/10V
C22
4.7uF/10V
C23
4.7uF/10V
C24
4.7uF/10V
VUSB
R16
0R/5%
C26
4.7uF/10V
C27
0.1uF/10V
C11
4.7pF/10V
C14
4.7pF/10V
U1
32MHz
C15
0.1uF/10V
C20
820pF/10V
C17
0.8pF/10V
C18
0.5pF/10V
L3
3.3nH
C38
NC
C53
NC
L13
0R/5%
C25
0.1uF/10V
RX_GPS
RST_GPS
TX_GPS
PPS
P1.03_Green
WAKE_UP
P1.01
SWDIO
SWDCLK
P0.10
P0.09
RLF
0R/5%
RHF
0R/5%
E1
RFANT3216120A5T
TFT_LED_EN
R27
10K/5%
R28
1K/5%
Q3
AO3401
R23
200R/5%
C52
0.1uF/10V
U4
1.14TFT
LEDA
GND
RESET
RS
SDA
SCL
VDD
CS
TFT_RST
TFT_RS
TFT_SDA
TFT_SCL
TFT_CS
TFT_EN
R17
10K/5%
R15
1K/5%
Q1
AO3401
C4
0.1uF/10V
P1
Header 13
P2
Header 13
P0.13
P0.16
P0.18 REST
P1.01
SWDIO
SWDCLK
P1.00 SWO
P0.09
P0.10
P0.08
P0.07 WP
P1.12 F_SPI_MOSI
P1.14 F_SPI_CLK
P0.05 HOLD
P1.15 F_SPI_CS
P1.13 F_SPI_MISO
P0.31
P0.29
P0.30
P0.28
X2
32MHz
C28
0.1uF/10V
L7
10R@100MHz
DIO3
U6
SX1262
VREG
DCC_SW
VBAT
VBAT_IO
DIO2
DIO1
BUSY
NRESET
MISO
MOSI
SCK
VR_PA
RFO
RFI_N
RFI_P
NSS
ANT_SW_CTRL
LORA_NSS
R20
10K/5%
DIO1
LORA_BUSY
LORA_NRSET
R22
10K/5%
LORA_SCK
LORA_MOSI
LORA_MISO
C39
470nF/10V
L11
15uH
C30
47nF/10V
C31
82pF/10V
L6
L9
L8
C36
C37
C42
C44
C45
L12
C46
0.1uF/10V
C47
0.1uF/10V
C49
C50
C34
U8
UPG2179
OUT1
GND
OUT2
Vcont1
IN
Vcont2
C35
1nF/10V
C43
1nF/10V
R18
100R/5%
R19
1M/5%
R21
100R/5%
Q5
2SC3356
ANT_SW_CTRL
L10
C40
C41
E3
IPEX
LED1
LED2
SK6812
DIN
VSS
VDD
DOUT
R3
4.7K/5%
C51
0.1uF/10V
P0.14
P4
P5
P6
Shield_Clip
P3
Header 8
TX_GPS
RX_GPS
WAKE_UP
PPS
RST_GPS