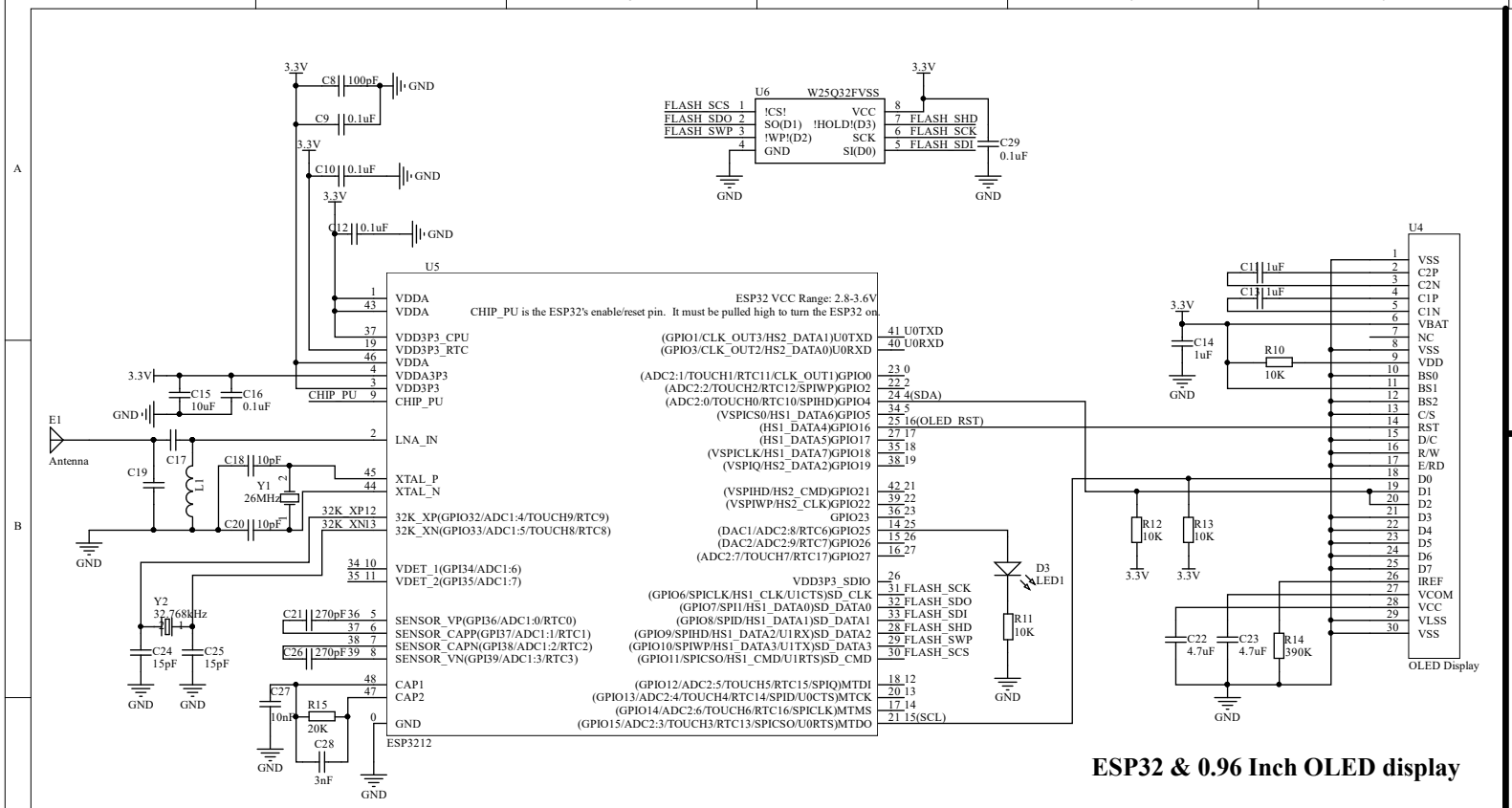

ESP32 & 0.96 Inch OLED display

CP2102

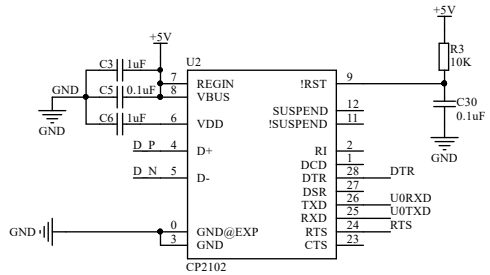

Header

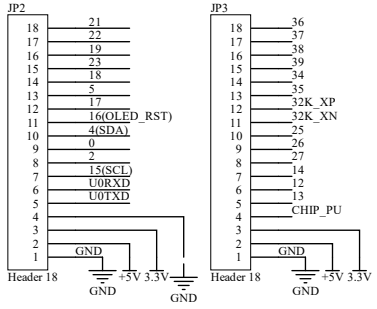

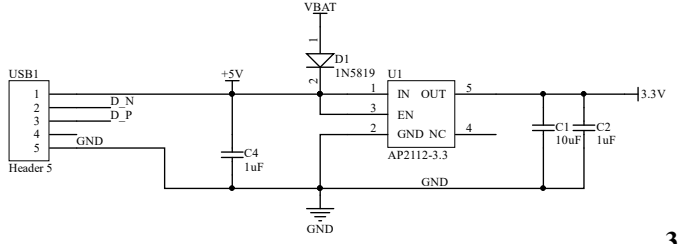

3.3V LDO

Programming Logic

Auto-Reset

Boot Mode Configuration			
Pin	Default	Boot	Download
GPIO0	1	1	0
U0TXD	1	1	x
GPIO2	0	x	0
GPIO4	0	x	x
MTDO	1	x	x
GPIO5	1	1	x
If U0TXD, GPIO2, GPIO5 are floating, GPIO0 determines boot mode			

If DTR is LOW, toggling RTS from HIGH to LOW resets to run mode.

If RTS is HIGH, toggling DTR from LOW to HIGH resets to bootloader.

Boot Mode Configuration

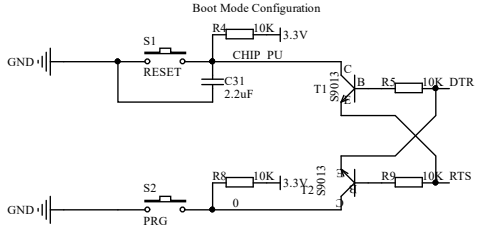

R6 = 10K I = 100mA

R6 = 5K I = 200mA

R6 = 2K I = 500mA

R6 = 1K I = 1A

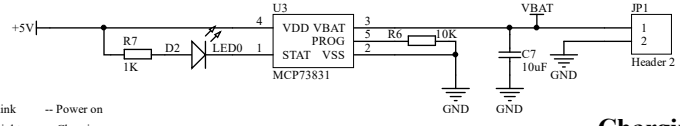

LED0 Blink -- Power on

Bright -- Charging

Shut down -- Charging over

Charging circuit

www.heltec.cn

Heltec Automation