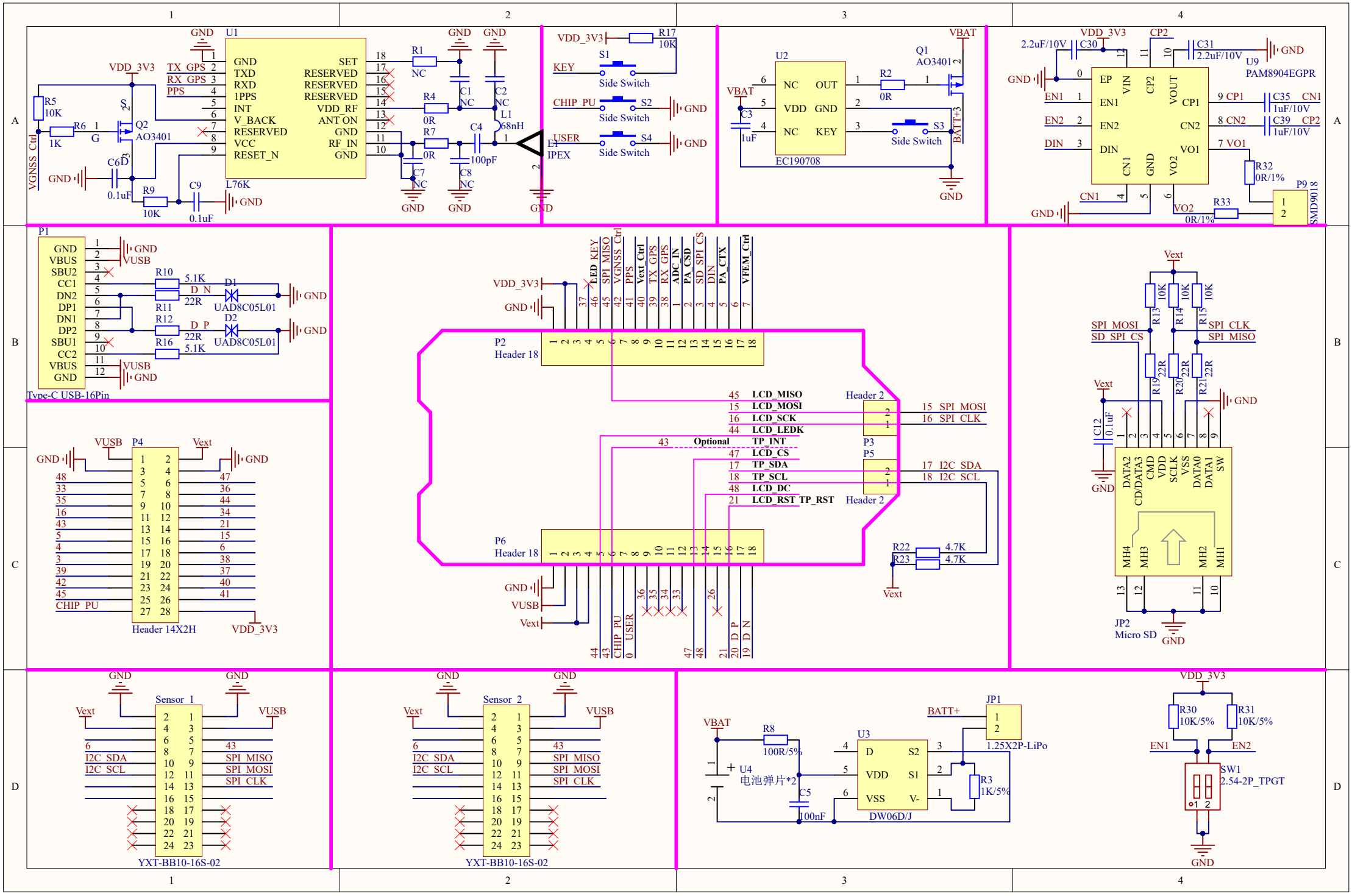
U1
GND
TXD
RXD
1PPS
INT
V_BACK
RESERVED
VCC
RESET_N
SET
RESERVED
RESERVED
RESERVED
VDD_RF
ANT ON
GND
RF_IN
GND
TX_GPS
RX_GPS
PPS
VDD_3V3
VGNSS_Ctrl
R5 10K
R6 1K
Q2 AO3401
C6 0.1uF
R9 10K
C9 0.1uF
L76K
R1 NC
R4 0R
R7 0R
C1 NC
C2 NC
C4 100pF
C7 NC
C8 NC
L1 68nH
E1 IPEX
R17 10K
KEY
CHIP_PU
USER
S1
S2
S4
Side Switch
U2
EC190708
NC
OUT
VDD
GND
KEY
VBAT
C3 1uF
R2 0R
Q1 AO3401
S3
BATT+3
U9 PAM8904EGPR
C30 2.2uF/10V
C31 2.2uF/10V
EP
EN1
EN2
DIN
VIN
CP2
VOUT
CP1
CN2
VO1
CN1
VO2
C35 1uF/10V
C39 1uF/10V
R32 0R/1%
R33 0R/1%
P9 SMD9018
P1 Type-C USB-16Pin
VBUS
SBU2
CC1
DN2
DP1
DN1
DP2
SBU1
CC2
R10 5.1K
R11 22R
R12 22R
R16 5.1K
D_N
D_P
D1 UAD8C05L01
D2 UAD8C05L01
VUSB
P2 Header 18
LED_KEY
SPI_MISO
VGNSS_Ctrl
PPS
Vext_Ctrl
TX_GPS
RX_GPS
ADC_IN
PA_CSD
SD_SPI_CS
DIN
PA_CTX
VFEM_Ctrl
P6 Header 18
LCD_MISO
LCD_MOSI
LCD_SCK
LCD_LEDK
Optional
TP_INT
LCD_CS
TP_SDA
TP_SCL
LCD_DC
LCD_RST_TP_RST
Header 2
P3
P5
SPI_MOSI
SPI_CLK
I2C_SDA
I2C_SCL
R22 4.7K
R23 4.7K
Vext
R13 10K
R14 10K
R15 10K
R19 22R
R20 22R
R21 22R
C12 0.1uF
DATA2
CD/DATA3
CMD
VDD
SCLK
VSS
DATA0
DATA1
SW
MH4
MH3
MH2
MH1
JP2 Micro SD
P4 Header 14X2H
CHIP_PU
Sensor_1 YXT-BB10-16S-02
Sensor_2 YXT-BB10-16S-02
I2C_SDA
I2C_SCL
SPI_MISO
SPI_MOSI
SPI_CLK
R8 100R/5%
U4 电池弹片*2
C5 100nF
U3 DW06D/J
D
S2
VDD
S1
VSS
V-
R3 1K/5%
JP1 1.25X2P-LiPo
BATT+
R30 10K/5%
R31 10K/5%
SW1 2.54-2P_TPGT