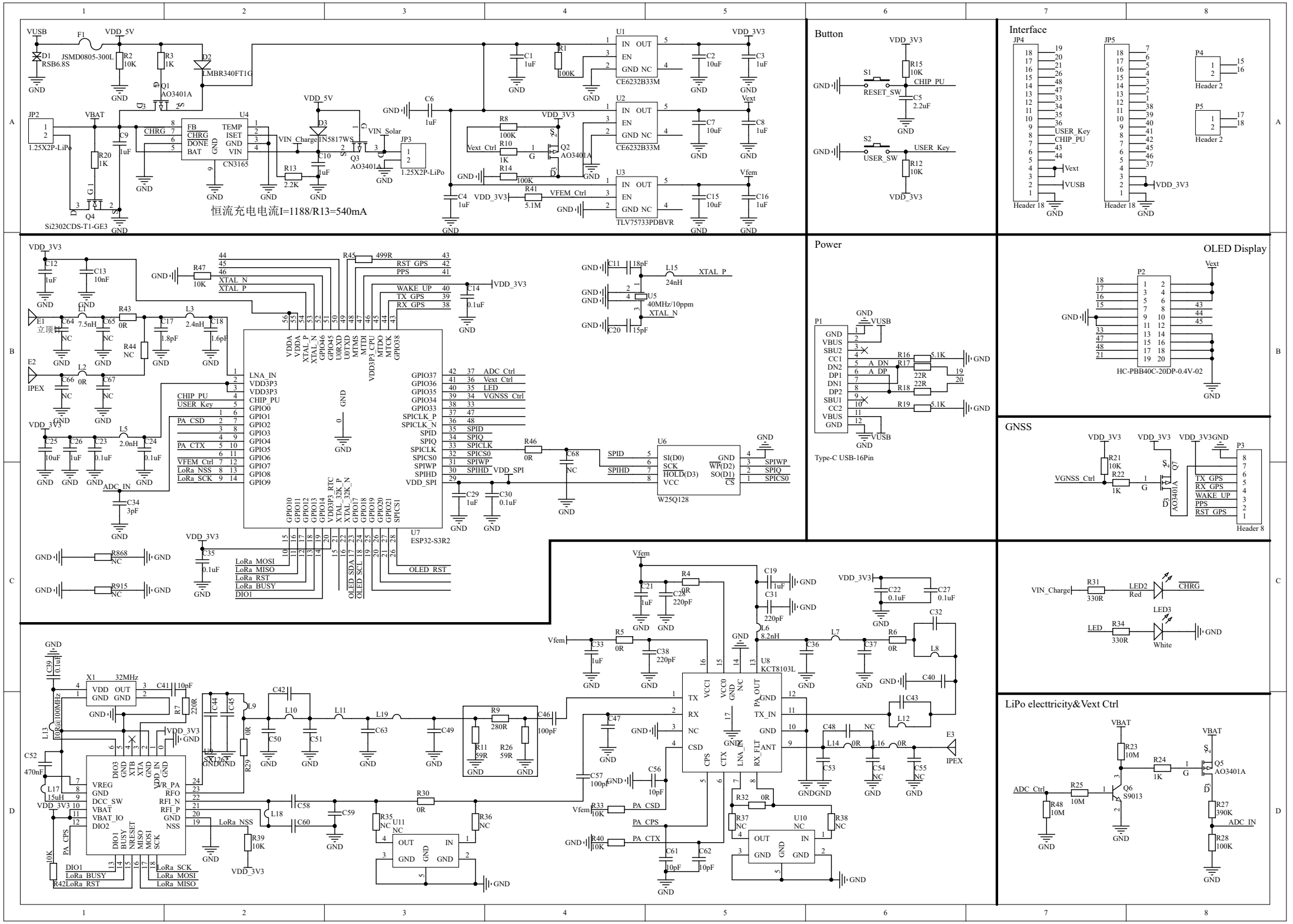
Button
Interface
Power
OLED Display
GNSS
LiPo electtricity&Vext Ctrl
恒流充电电流I=1188/R13=540mA
CE6232B33M
TLV75733PDBVR
CN3165
ESP32-S3R2
W25Q128
SX1262
KCT8103L
Type-C USB-16Pin
HC-PBB40C-20DP-0.4V-02
40MHz/10ppm
1.25X2P-LiPo
Si2302CDS-T1-GE3
AO3401A
S9013
Header 18
Header 2
Header 8
LED2 Red
LED3 White