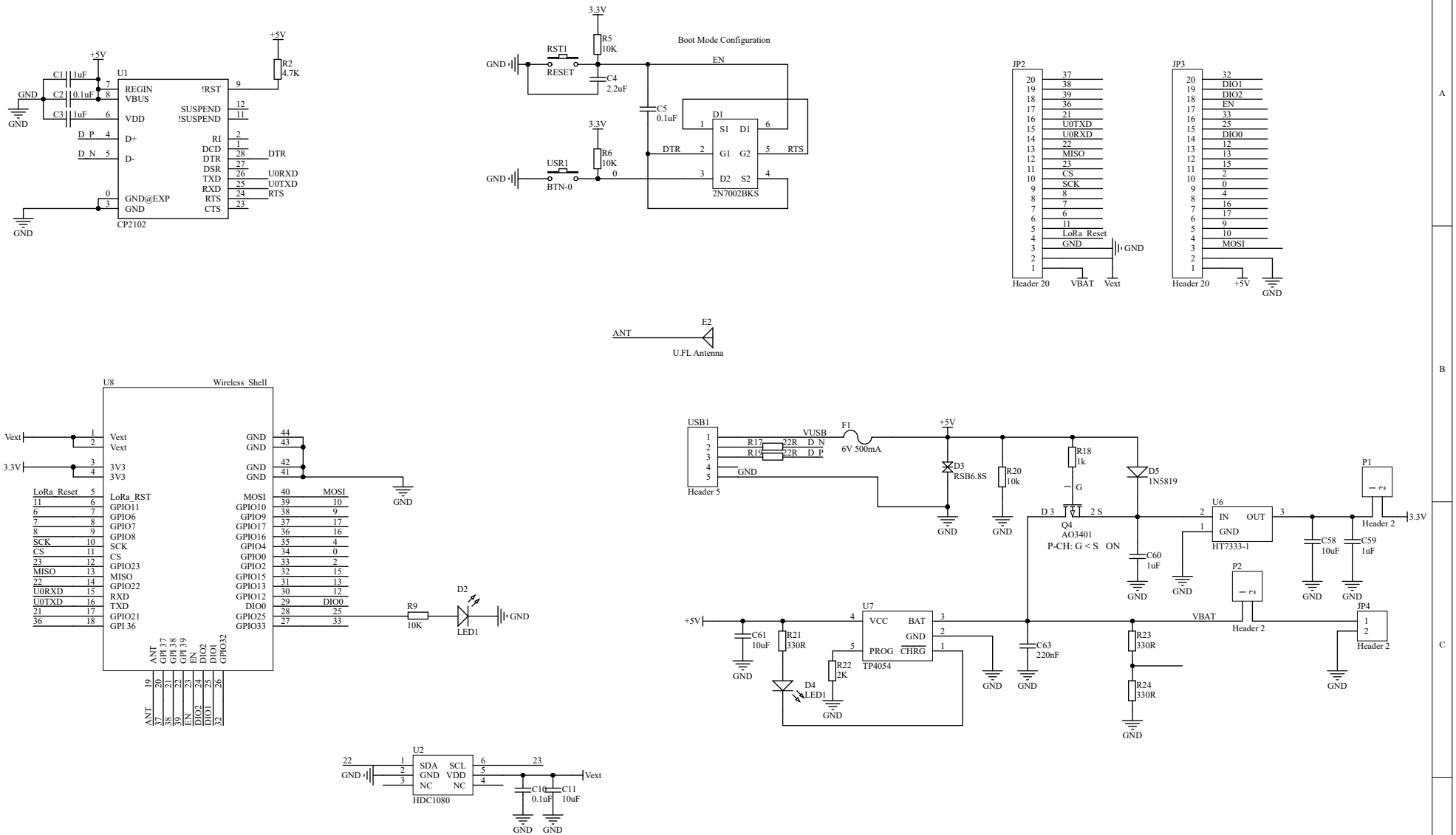
U1
CP2102
REGIN
VBUS
VDD
D+
D-
GND@EXP
GND
!RST
SUSPEND
!SUSPEND
RI
DCD
DTR
DSR
TXD
RXD
RTS
CTS
C1 1uF
C2 0.1uF
C3 1uF
R2 4.7K
+5V
3.3V
RST1
RESET
USR1
BTN-0
R5 10K
R6 10K
C4 2.2uF
C5 0.1uF
Boot Mode Configuration
EN
D1
2N7002BKS
S1 D1
G1 G2
D2 S2
JP2
Header 20
VBAT
Vext
JP3
DIO1
DIO2
MOSI
E2
ANT
U.FL Antenna
U8
Wireless_Shell
LoRa_RST
GPIO11
GPIO6
GPIO7
GPIO8
GPIO23
GPIO22
GPIO21
GPI 36
GPIO10
GPIO9
GPIO17
GPIO16
GPIO4
GPIO0
GPIO2
GPIO15
GPIO13
GPIO12
DIO0
GPIO25
GPIO33
R9 10K
D2
LED1
U2
HDC1080
SDA
SCL
NC
C10 0.1uF
C11 10uF
USB1
Header 5
VUSB
F1
6V 500mA
R17 22R
R19 22R
D3 RSB6.8S
R20 10k
R18 1k
D5 1N5819
Q4
AO3401
P-CH: G < S ON
C60 1uF
U6
HT7333-1
IN
OUT
C58 10uF
C59 1uF
P1
Header 2
P2
JP4
U7
TP4054
VCC
BAT
PROG
CHRG
C61 10uF
R21 330R
R22 2K
D4
LED1
C63 220nF
R23 330R
R24 330R