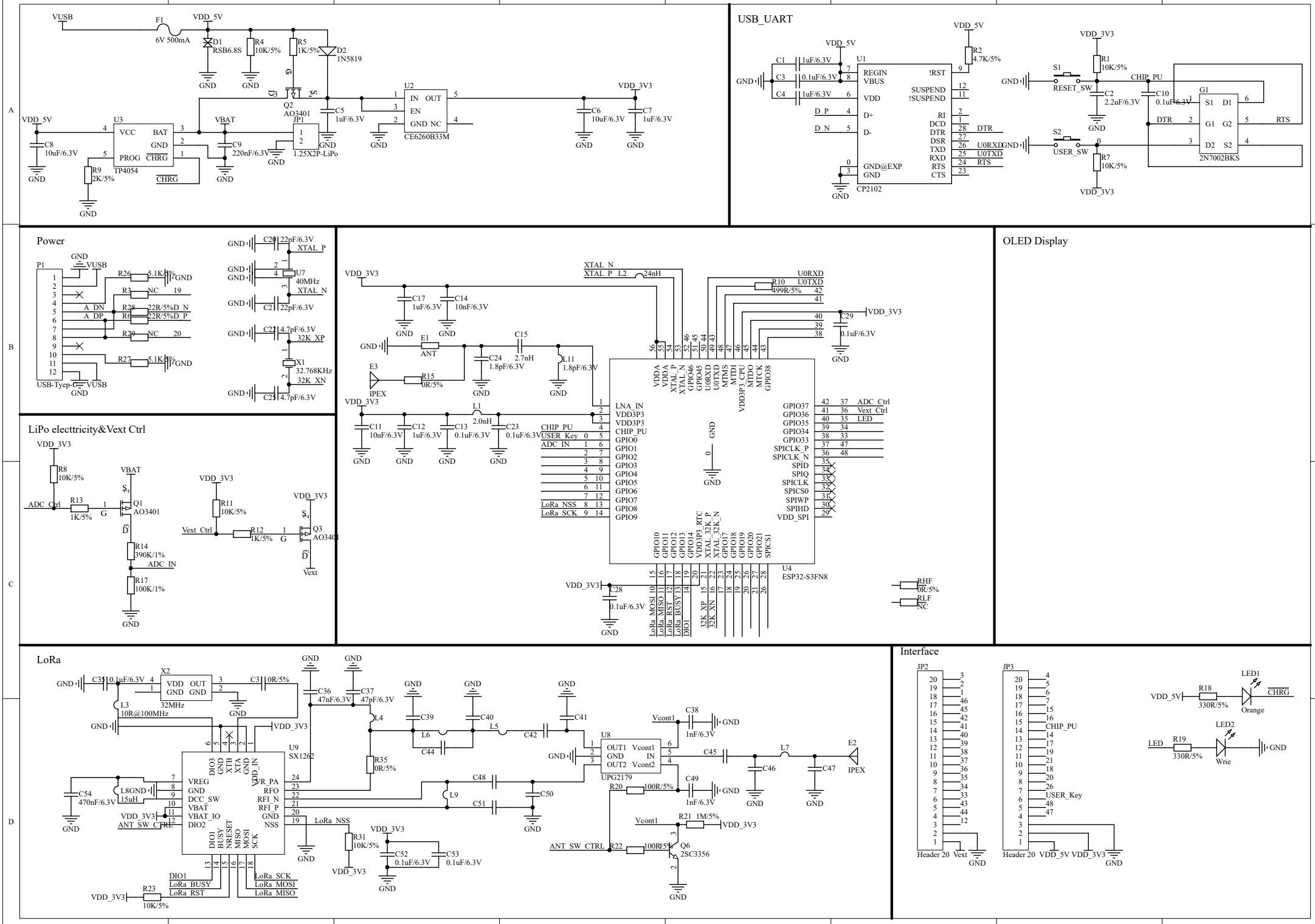

USB_UART
Power
LiPo electtricity&Vext Ctrl
OLED Display
LoRa
Interface
VUSB
F1
6V 500mA
VDD_5V
D1
RSB6.8S
R4
10K/5%
R5
1K/5%
D2
1N5819
Q2
AO3401
U2
CE6260B33M
U3
TP4054
VCC
BAT
GND
PROG
CHRG
VBAT
C5
1uF/6.3V
C6
10uF/6.3V
C7
1uF/6.3V
C8
10uF/6.3V
C9
220nF/6.3V
R9
2K/5%
JP1
1.25X2P-LiPo
VDD_3V3
U1
CP2102
REGIN
VBUS
VDD
D+
D-
GND@EXP
!RST
SUSPEND
!SUSPEND
RI
DCD
DTR
DSR
TXD
RXD
RTS
CTS
R2
4.7K/5%
C1
1uF/6.3V
C3
0.1uF/6.3V
C4
1uF/6.3V
R1
10K/5%
R7
10K/5%
S1
RESET_SW
S2
USER_SW
C2
2.2uF/6.3V
C10
0.1uF/6.3V
CHIP_PU
G1
2N7002BKS
U0RXD
U0TXD
RTS
P1
USB-Tyep-C
R26
5.1K/5%
R3
NC
R28
22R/5%
R6
22R/5%
R29
NC
R27
5.1K/5%
A_DN
A_DP
D_N
D_P
C20
22pF/6.3V
C21
22pF/6.3V
C22
4.7pF/6.3V
C23
4.7pF/6.3V
U7
40MHz
XTAL_P
XTAL_N
X1
32.768KHz
32K_XP
32K_XN
E1
ANT
E3
IPEX
R15
0R/5%
C15
2.7nH
C24
1.8pF/6.3V
L11
1.8pF/6.3V
L1
2.0nH
C17
1uF/6.3V
C14
10nF/6.3V
C11
10uF/6.3V
C12
1uF/6.3V
C13
0.1uF/6.3V
C23
0.1uF/6.3V
C29
0.1uF/6.3V
R10
499R/5%
U4
ESP32-S3FN8
LNA_IN
VDD3P3
CHIP_PU
GPIO0
GPIO1
GPIO2
GPIO3
GPIO4
GPIO5
GPIO6
GPIO7
GPIO8
GPIO9
GPIO37
GPIO36
GPIO35
GPIO34
GPIO33
SPICLK_P
SPICLK_N
SPID
SPIQ
SPICLK
SPICS0
SPIWP
SPIHD
VDD_SPI
ADC_Ctrl
Vext_Ctrl
LED
USER_Key
ADC_IN
LoRa_NSS
LoRa_SCK
LoRa_MOSI
LoRa_MISO
LoRa_RST
LoRa_BUSY
DIO1
32K_XP
32K_XN
C28
0.1uF/6.3V
RHF
0R/5%
RLF
NC
R8
10K/5%
R13
1K/5%
Q1
AO3401
R14
390K/1%
R17
100K/1%
R11
10K/5%
R12
1K/5%
Q3
AO3401
Vext
X2
32MHz
C35
0.1uF/6.3V
C31
0R/5%
L3
10R@100MHz
C36
47nF/6.3V
C37
47pF/6.3V
L4
R35
0R/5%
U9
SX1262
VREG
DCC_SW
VBAT
VBAT_IO
DIO2
DIO3
XTB
XTA
VR_PA
RFO
RFI_N
RFI_P
NSS
DIO1
BUSY
NRESET
MISO
MOSI
SCK
C54
470nF/6.3V
L8
15uH
ANT_SW_CTRL
R23
10K/5%
R31
10K/5%
C52
0.1uF/6.3V
C53
0.1uF/6.3V
C39
C40
C41
C42
C44
L5
L6
L9
C48
C50
C51
U8
UPG2179
OUT1
OUT2
Vcont1
Vcont2
C38
1nF/6.3V
C49
1nF/6.3V
R20
100R/5%
R21
1M/5%
R22
100R/5%
Q6
2SC3356
C45
C46
C47
L7
E2
IPEX
JP2
JP3
Header 20
Vext
VDD_5V
VDD_3V3
CHIP_PU
USER_Key
LED1
LED2
R18
330R/5%
R19
330R/5%
Orange
Wrie
CHRG
LED
GND