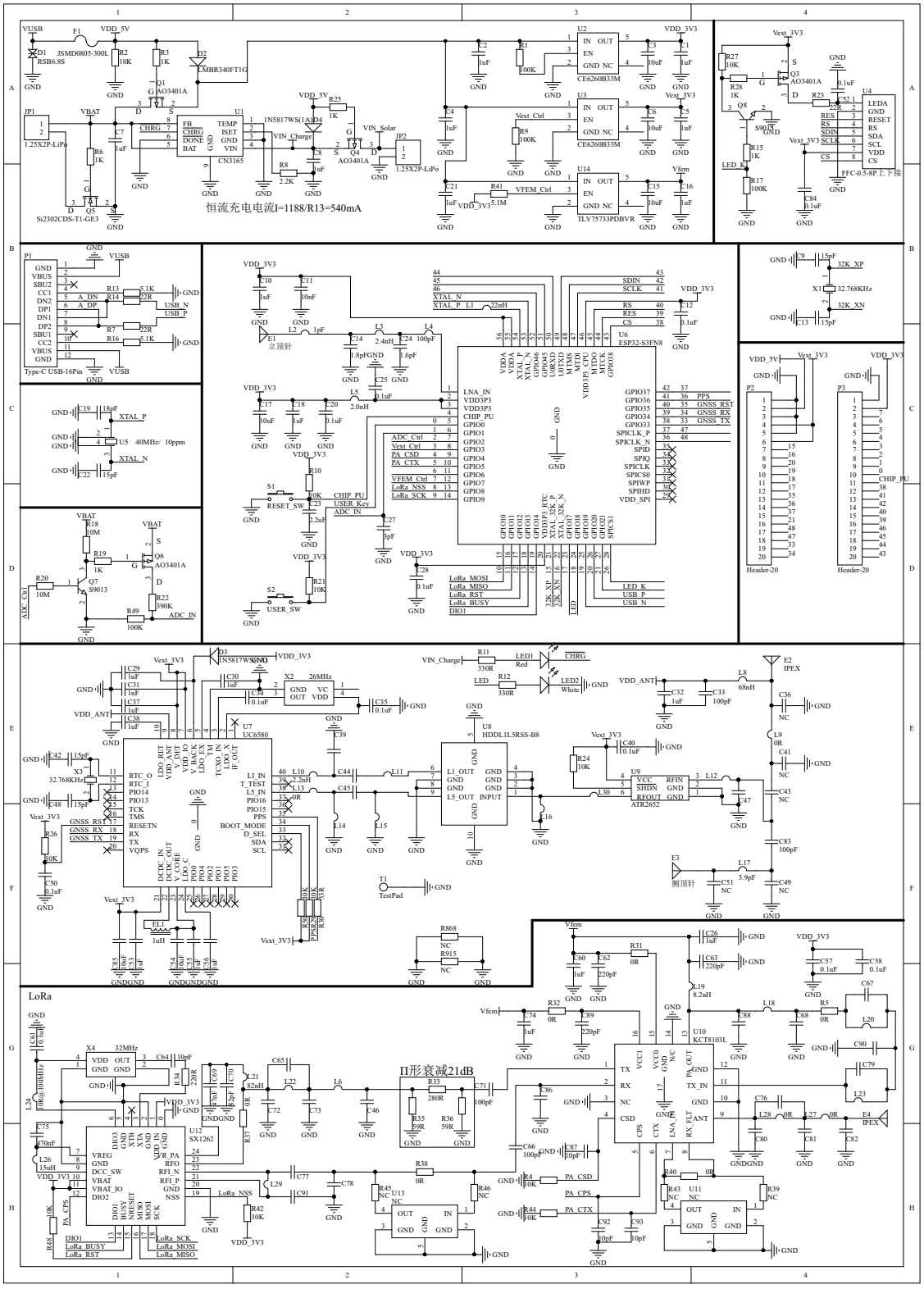
恒流充电电流I=1188/R13=540mA
LoRa
Π形衰减21dB
ESP32-S3FN8
CN3165
CE6260B33M
TLV75733PDBVR
TLV75733PDBVR
ATR2652
HDDL1L5RSS-B8
UC6580
SX1262
KCT8103L
Type-C USB-16Pin
FFC-0.5-8P 上下接
Header-20
Header-20
IPEX
IPEX
侧顶针
立顶针
TestPad